GENERAL NOTES:

1) MATERIAL TO BE HOT DIPPED, PRE-GALVANIZED STEEL, ASTM A641, TO AVOID THE FORMATION OF ZINC WHISKERS.

2) DIMENSIONAL TOLERANCES

   A) GENERAL +/- 1/16
   B) MATERIAL THICKNESS +/- 1/32
   C) ANGULARITY +/- 2 DEG.

3) ALL UNITS INCHES

4) FINISH OPTIONS

   A) SAME AS ABOVE

5) MATERIAL THICKNESS 13 GAGE = .0747

6) WEIGHT = 5 LBS / BOX

7) 50 SETS / BOX

8) 60 LBS MAX / SHIPPING BOX.

9) SUPPORT CLAMP SCREW (BUY ITEM)
   1/4 - 20 UNC-2A SELF THREADING SCREW.

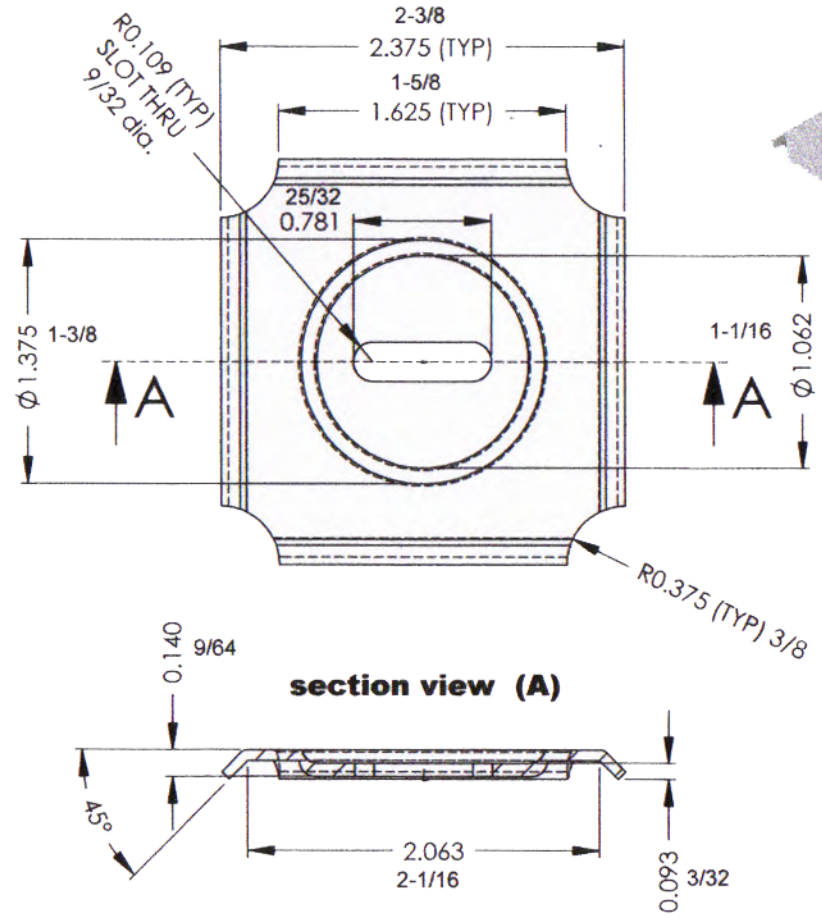

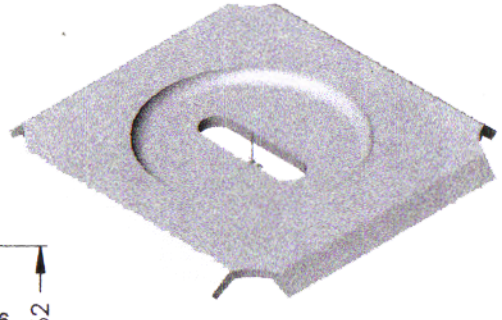

UNLESS OTHERWISE SPECIFIED: DIMENSIONS ARE IN INCHES						DEBUR AND BREAK SHARP EDGES
REVISION	NAME	CHANGE	DATE			
A	AF		5-12-10			
				MATERIAL:		
				WEIGHT:		

ACCESS CABLE TRAYS
A Product of IRVINE ACCESS FLOORS

TITLE:

FLOORFLEX GROUND CLIP

DWG NO.

GR - CLIP

SCALE:1:1 | SHEET 1 OF 1